MITSUBISHI POWER

SCDIM01 Safety DI module

Safety I/O Digital inputs 8 ch

■Summary

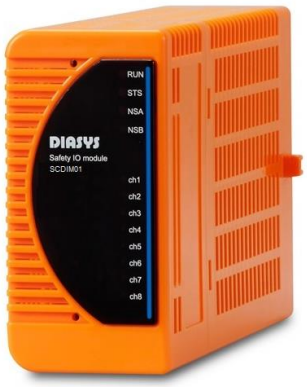

＊Number of input channels	:	8 ch (Channel individual insulation)
＊Input load range	:	ON 2 to 5 KΩ OFF 10 to 20 KΩ Switch : 2
＊User interface	:	(Front panel upper side : for H/W reset, lower side : unused)
＊Module ambient temperature	:	-5 to 60℃

＊In compliance with Functional Safety Standard IEC 61508

MITSUBISHI POWER

SCDIM01 Safety DI module

Safety I/O Digital inputs 8 ch

■Specifications

ITEM		SPECIFICATION	
Input	Number of channels	8 ch (Channel individual insulation)	
	Range	Less than 4 mA	
	Delay	Less than 500 usec	
	Load resistance	Over range	Less than 2 kΩ
		ON	2 to 5 kΩ
		Undefined	5 to 10 kΩ
		OFF	10 to 20 kΩ
		Under range	More than 20 kΩ
Safe state		Communication cutoff	
Data refresh cycle		1 msec	
Data format		0, 1	
AD conversion type		⊿Σ, Successive approximation register (SAR)	
Input filter		Software filter 0 to 65535 msec (All channel set togather by 1 msec step)	
Isolation voltage		AC 500 V Internal circuit (CPU/FPGA) - I/O terminal AC 500 V I/O terminal - PE DC 200 V Between I/O channels	
User interface		Switch	2 (Front panel upper side : for H/W reset, lower side : unused)
Self diagnosis		Redundant I/O circuit comparison check Redundant CPU comparison check Quadruplexed A/D converter comparison check ADC stuck check CRC check Data format check I/O signal range check Watchdog timer Communication timeout check Redundant voltage monitor Clock abnormal check Functional check of the abnormal communication signal TPFS(Temporal Programming Flow Supervision) : Loss-of-function check for system timers LPFS(Logical Programming Flow Supervision) : Loss-of-function check for logical programming flow Open-wire: Detection as under-range short-circuit check: Detection as over-range	
Event input (EDI) function		Event input module: 8 Event input: set by software (EMS)	
Protection	Electrical	Overvoltage protection Overcurrent protection Double-insulated	
	Safety Function	Abnormal communication signal cutoff	
Indicators		4 indicators: Power / Status / Network status A / Network status B 8 indicators: IO status for each channel	
Current consumption		175 mA	
Weight		Less than 300 g	
Size		152.5 mm (D) x 94 mm (H) x 46 mm (W) (Protrusions excluded)	
Certification body		TÜV SÜD	
Safety integrity level	(IEC 61508-1)	SIL3	
EMC Zone	(EN 61131-2)	B (Dedicated power distribution, rated voltage: 300 V or less)	
Overvoltage category	(IEC 60664-1)	II (Energy-consuming equipment to be supplied from the fixed installation)	
IEC protection class	(IEC 60204-1)	II (Double insulated)	
solation method		Channel individual insulation	
Hot-swapping		Supported *However, depending on the field circuit and the application program	
Resolution		16 bit *Two types of AD converters are duplexed.	
Rated voltage		DC 24 V -15% to +20% (The voltage supplied from the backplane)	
Environmental conditions	Module ambient temperature	(Operation) -5 to +60°C	(Storage) -25 to +85°C
	Module ambient humidity	(Operating / Storage) 0 to 95% RH (No condensation)	
Vibration		3.5 mm at 5 to 8.4 Hz, 1 G at 8.4 to 150 Hz	
Shock		15 G 11 ms	

About compliant module type

For compliant modules of this product, please refer to " Compliant backplane list (CGS-S9901-E-XX) ".

For compliant modules of this product, please refer to " Compliant accessory connector list (CGS-S9902-E-XX) ".

SCDIM01 Safety DI module

Safety I/O Digital inputs 8 ch

■Supported standards/Supported directives

Certified standard	Year	Title
IEC 61508	2010	Functional safety of electrical/electronic/programmable electronic safety-related systems
EN 61131-2	2007	Programmable controllers - Part 2: Equipment requirements and tests
IEC 61131-6	2012	Programmable controllers - Part 6: Functional safety
IEC 61511-1	2004	Functional safety - Safety instrumented systems for the process industry sector - Part 1: Framework, definitions, system, hardware and software requirements,
EN 50156-1	2004	Electrical equipment for furnaces and ancillary equipment - Part 1 : Requirements for application design and installation
ISO 13849-1	2008	Safety of machinery – Safety-related parts of control systems-Part 1:General principles for design
EN 54-2	2007	Fire detection and fire alarm systems Part 2: Control and indicating equipment

Supported directive	Year	Title
RoHS	2011	DIRECTIVE 2011/65/EU OF THE EUROPEAN PARLIAMENT AND OF THE COUNCIL of 27 January 2003 on the restriction of the use of certain hazardous substances in electrical and electronic equipment
Low Voltage	2006	DIRECTIVE 2006/95/EC OF THE EUROPEAN PARLIAMENT AND OF THE COUNCIL of 12 December 2006 on the harmonisation of the laws of Member States relating to Electrical Equipment designed for use within certain voltage limits
EMC	2004	DIRECTIVE 2004/108/EC OF THE EUROPEAN PARLIAMENT AND OF THE COUNCIL of 15 December 2004 on the approximation of the laws of the Member States relating to electromagnetic compatibility and repealing Directive 89/336/EEC
Machinery	2006	DIRECTIVE 2006/42/EC OF THE EUROPEAN PARLIAMENT AND OF THE COUNCIL of 17 May 2006 on machinery, and amending Directive 95/16/EC

MITSUBISHI POWER

SCDIM01 Safety DI module

Safety I/O Digital inputs 8 ch

■Block Diagram

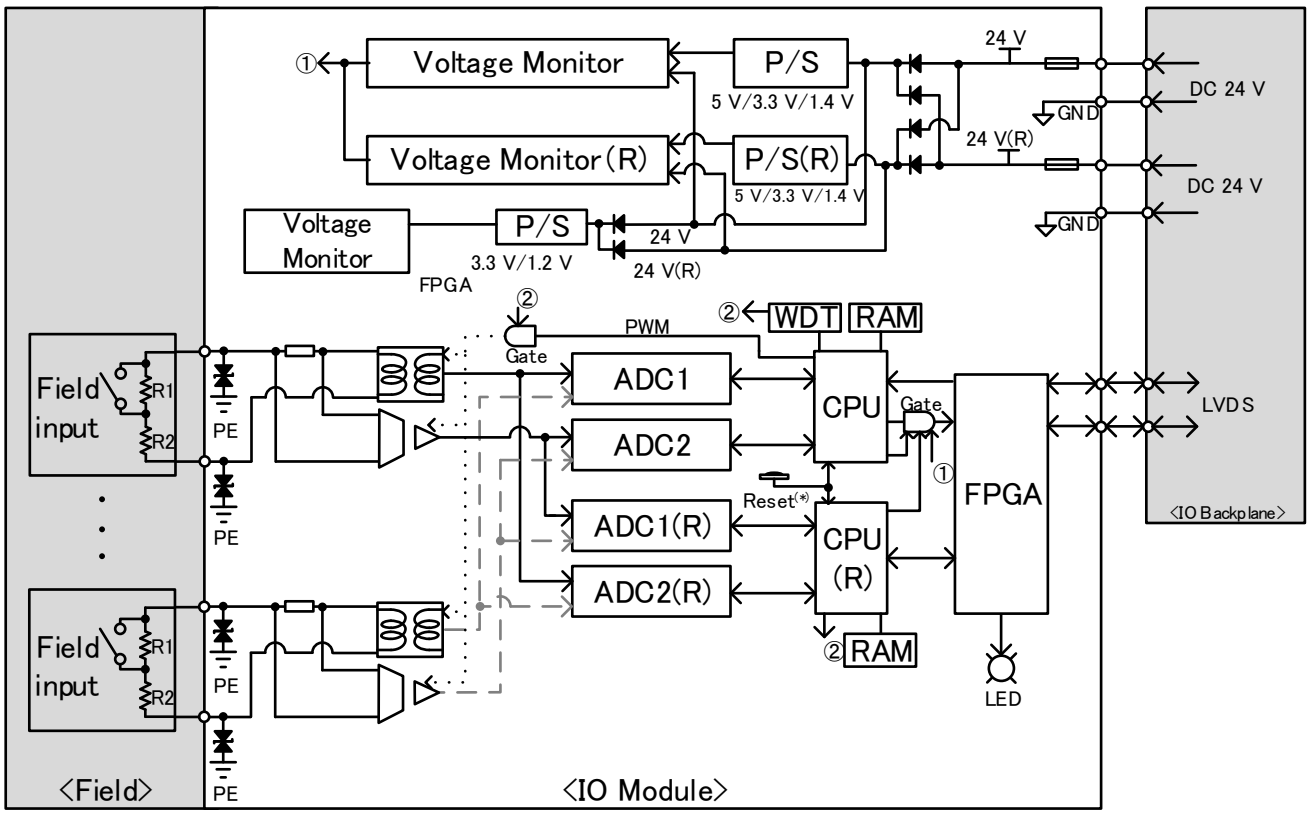

(*) Indicates the H/W reset switch on the upper side of the front panel.

(R)	:	Redundant
P/S	:	Power Supply
LVDS	:	Low Voltage Differential Signaling
FPGA	:	Field Programmable Gate Array
CPU	:	Central Processing Unit
RAM	:	Random Access Memory
WDT	:	Watch Dog Timer
ADC	:	Analog Digital Converter
PWM	:	Pulse Width Modulation
Gate	:	Buffer Gate
LED	:	Light Emitting Diode
GND	:	Ground
PE	:	Protective Earth
F.S.	:	Full Scale
BP	:	Backplane
	:	Resistor
	:	Fuse
	:	Zener diode
	:	Transformer