MITSUBISHI POWER

LSDIM01A-1 DI module

LS communication　Digital inputs : 16　1count/pulse

■Summary

＊Number of inputs	:	16 (16 ch common isolation)
＊Module ambient temperature	:	-5 to 60°C
＊Isolation	:	Digital isolation Transformer insulation
＊Count		1Count/pulse

MITSUBISHI POWER

LSDIM01A-1 DI module

LS communication Digital inputs : 16 1count/pulse

■Specifications

ITEM			SPECIFICATION
Input	Number of channels		16 (16 ch common isolation)
	Range	ON current	More than 2 mA *Selectable power for sense current: +24 V/-24 V/+48 V/-48 V
		OFFcurrent	Less than 1.0 mA
		When disconnected	When disconnection detection function is set: Less than 0.5 mA
Data refresh cycle			0.3 ms/All channels
Input filter			Software digital filter (Channel individual)
Dielectric strength			AC 1500 V Between input terminal and PE
Communication with IOA	Communicaton method		LVDS
	Communication speed		100 Mbps
Self-diagnostic functions			Power voltage check (24 V, 3.3 V, 2.5 V, 1.8 V, 1.0 V, VIO) Clock check (FPGA-MCU for diagnosis, MCU for diagnosis -FPGA) Heartbeat check (FPGA-MCU, FPGA-MCU for diagnosis, MCU for diagnosis -FPGA) CRC check (FPGA) Sense voltage/current check (MCU) MCU power check (MCU)
Event DI function(EDI)			Event DI module: 16 Event signal input: Settable by software (EMS) Time resolution: 1 msec
Pulse input function(PI)			Pulse input module: 16 Input pulse rate: 0 to 500 Hz (Both ON, OFF times shall be more than 0.5 msec) Count: OFF → ON (1count/pulse)
Detective			Disconnection detection
Protection	IO circuit Protection Power supply Protection		Overvoltage protection Overcurrent protection
Indicator	Display LED		4: RUN (Run)/STS (Status)/NSA (Network status A)/NSB (Network status B)
	Channel status LED		16: Ch 1 to Ch 16
Insulation method			Digital isolator (Transformer insulation)
Hot swap			Possible
Power supply			DC 24 V ±20% (The voltage supplied from the backplane)
Environmental conditions	Module ambient temperature		(Operating) -5 to 60℃ (Storage) -40 to 85℃
	Module ambient humidity		(Operating / Storage) 10 to 95% RH or less (No condensation)
Vibration			3.5 mm @5 to 8.4 Hz 1 G @8.4 to 150 Hz
Shock			15 G 11 ms
Current consumption			Less than 251 mA
Weight			0.13 kg
Dimensions			62 mm (D) x 94 mm (H) x 46 mm (W) (Except projection)
Standard/Directive			EN 61131-2:2007, RoHS

About compliant module type

For compliant backplanes of this product, please refer to " Compliant backplane list (CGS-S9901-E-XX) ".

For compliant accessory connectors of this product, please refer to " Compliant accessory connector list (CGS-S9902-E-XX) ".

MITSUBISHI POWER

LSDIM01A-1 DI module

LS communication Digital inputs : 16 1count/pulse

■Block diagram

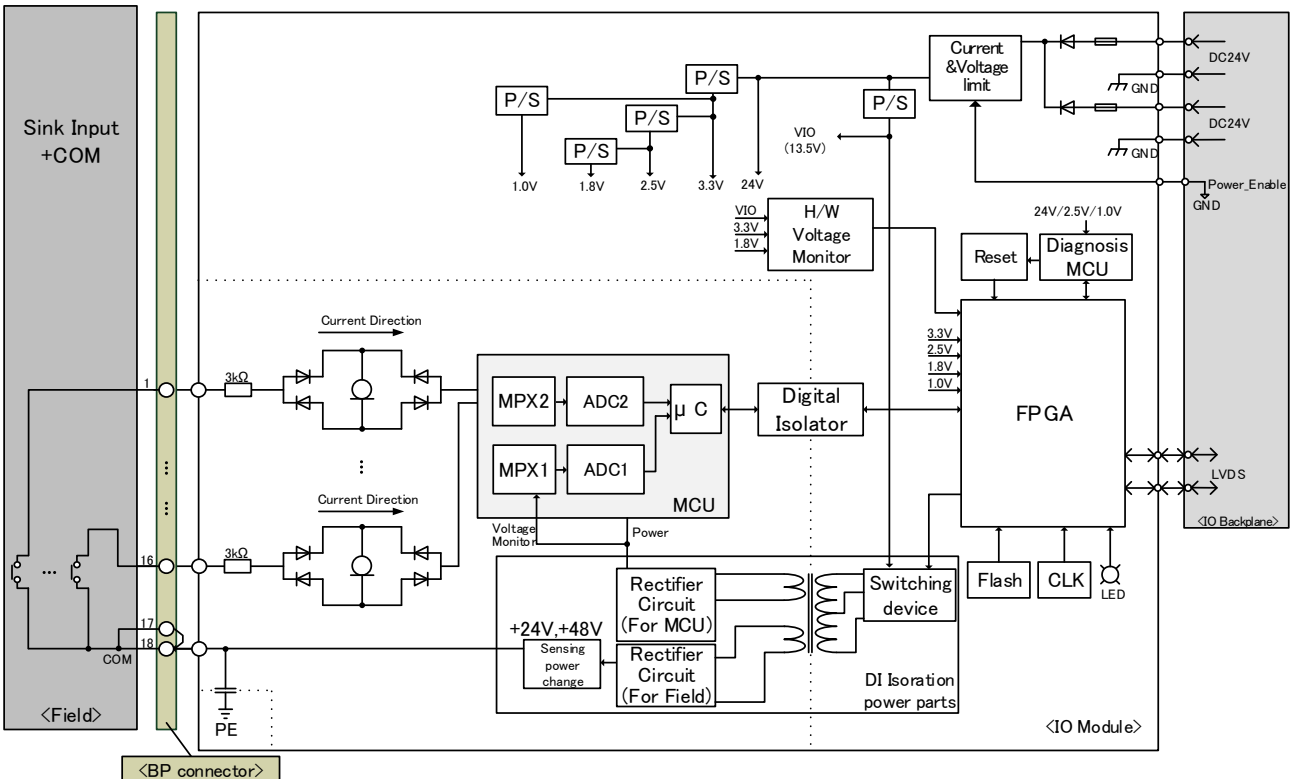

P/S	:	Power supply
MPX	:	Multiplexer
ADC	:	Analog digital converter
μC	:	Micro controller
CLK	:	Clock
FPGA	:	Field programmable gate array
LED	:	Light emitting diode
MCU	:	Micro control unit
GND	:	Ground
COM	:	Common
IOA	:	I/O adapter
LVDS	:	Low Voltage Differential Signaling
EMS	:	Engineering Management System
BP	:	Backplane
PE	:	Protective Earth
	:	Resistor
	:	Fuse
	:	Diode
	:	Capacitor
	:	Switch
	:	Transformer
	:	Constant current circuit

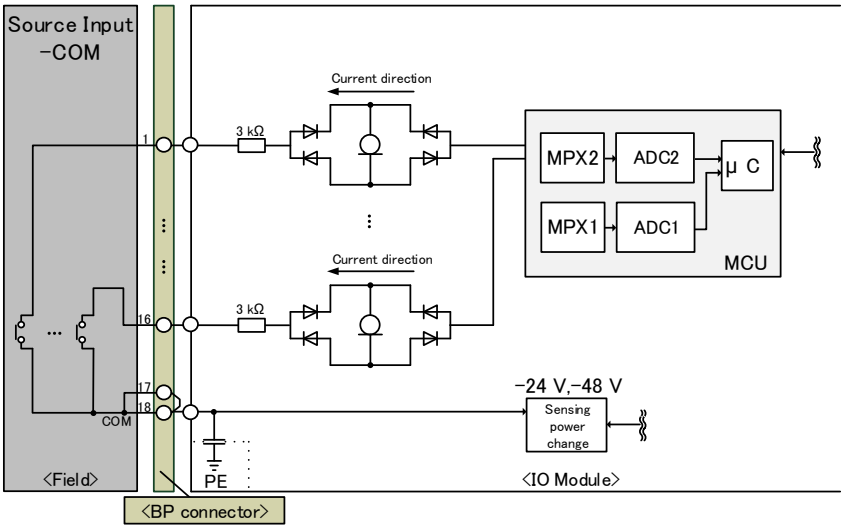

When using, please read the instruction manual attached to the product carefully and use it properly.
This catalog may not be distributed or reproduced in whole or in part without permission.
Please be aware that due to product improvements and modifications, the product description in this catalog may differ in certain respects from the actual product.
DIASYS Netmation/DIASYS Netmation4S is a registered trademark of Mitsubishi Heavy Industries, Ltd.
The service names and product names of other companies described in this catalog are the trademarks or registered trademarks of each company.

DIASYS Netmation®
DIASYS Netmation4S®

MOVE THE WORLD FORWARD MITSUBISHI HEAVY INDUSTRIES GROUP

Mitsubishi Power is a power solutions brand of Mitsubishi Heavy Industries.

CGS-S5304-E-01 (2023. 08. 31)